UNIT-4

1.Explain in brief the different types of DMA data transfer.

Ans:

Mode-1:

Burst Mode –

- In this mode Burst of data (entire data or burst of block containing data) is transferred before CPU takes control of the buses back from DMAC.
- This is the quickest mode of DMA Transfer since at once a huge amount of data is being transferred.
- Since at once only the huge amount of data is being transferred so time will be saved in huge amount.

Pros:

- Fastest mode of DMA Transfer

Cons:

- Less user friendly because during the DMA transfer CPU will be blocked.

Percentage of Time CPU remains blocked:

Let time taken to prepare the data be Tx and time taken to transfer the data be Ty. Then percentage of time CPU remains blocked due to DMA is as follows.

Percentage of time CPU remains in blocked state = Ty * 100% / Tx + Ty

Mode-2:

Cycle Stealing Mode –

- Slow IO device will take some time to prepare data (or word) and within that time CPU keeps the control of the buses.
- Once the data or the word is ready CPU give back control of system buses to DMAC for 1-cycle in which the prepared word is transferred to memory.
- As compared to Burst mode this mode is little bit slowest since it requires little bit of time which is actually consumed by IO device while preparing the data.

Pros:

- Most Efficient way for DMA Transfer.
- CPU won't be blocked entire time.

Cons:

- Rate of DMA Transfer will be less.

Percentage of Time CPU remains blocked:

Let time taken to prepare data be Tx and time taken to transfer the data be Ty. Then percentage of time CPU remains blocked due to DMA is as follows.

Percentage of time CPU remains in blocked state = Ty * 100% / Tx

Mode-3:

Interleaving Mode –

- Whenever CPU does not require the system buses then only control of buses will be given to DMAC.
- In this mode, CPU will not be blocked due to DMA at all.
- This is the slowest mode of DMA Transfer since DMAC has to wait might be for so long time to just even get the access of system buses from the CPU itself.
- Hence due to which less amount of data will be transferred.

Pros:

- CPU will not be blocked at all.

Cons:

- Slowest DMA transfer rate.

Since, DMA will use System Bus only when CPU is not using it So,

Percentage of time CPU remains in blocked state = 0%

2. Draw and explain the pin diagram of the 8257 DMA controller.

Ans: 8257 Pin Diagram:

Data Bus (D_0-D_7) : These are bi-directional tri-state signals connected to the system data bus. When CPU is having control of system bus it can access contents of address register, status register, mode set register, and a terminal count register and it can also program, control registers of DMA controller, through the data bus.

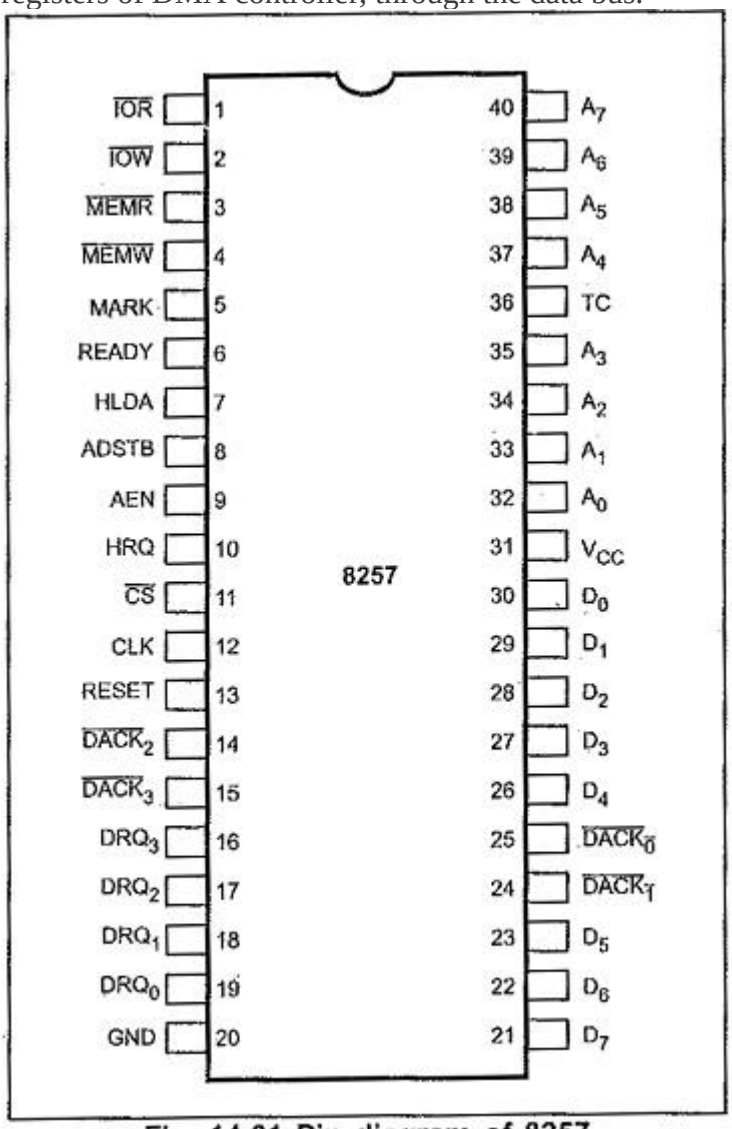

Fig. 14.61 Pin diagram of 8257

During DMA cycles these lines are used to send the most significant bytes of the memory address from one of the

8257 Pin Description:

Address Bus (A_0-A_3 and A_4-A_7) : The four least significant lines A_0-A_3 are bi – directional tri – state signals. In the idle cycle they are inputs and used by the CPU to address the register to be loaded or read. In the Active cycle they output the lower 4 bits of the address for DMA operation. A_4-A_7 are unidirectional lines, provide 4-bits of address during DMA service.

Address Strobe (ADSTB) : This signal is used to demultiplex higher byte address and data using external latch.

Address Enable (AEN) : This active high signal enables the 8-bit latch containing the upper 8-address bits onto the system address bus. AEN can also be used to disable other system bus drivers during DMA transfers.

Memory Read and Memory Write (MEMR, MEMW) : These are active low tri-state signals. The MEMR signal used to access data from the addressed memory location during a DMA read or memory-to-memory transfer and MEMW signal is used to write data to the addressed memory location during DMA write or memory to memory transfer.

I/O Read and I/O Write (IOR and IOW) : These are active low bi-directional signals. In idle cycle, these are an input control signals used by CPU to read/write the control registers. In the active cycle IOR signal is used to access data from a peripheral and IOW signal is used to send data to the peripheral.

Chip Select (CS) : This is an active low input, used to select the 8257 as an I/O device during the idle cycle. This allows CPU to communicate with 8257 Pin Diagram.

Reset : This active high signal clears, the command, status, request and temporary registers. It also clears the first/last flip-flop and sets the Master Register. After reset the device is in the idle cycle.

Ready : This input is used to extend the memory read and write signals from the 8257 to interface slow memories or I/O devices.

Hold request (HRQ) : Any valid DREQ causes 8257 to issue the HRQ. It is used for requesting CPU to get the control of system bus.

Hold Ackmiwledge (HLDA) : The active high Hold Acknowledge from the CPU indicates that it has relinquished control of the system bus.

$DREQ_0$-$DREQ_3$: These are DMA request lines, which are activated to obtain DMA service, until the corresponding DACK signal goes active.

$DACK_0$-$DACK_3$: These are used to indicate peripheral devices that the DMA request is granted.

Terminal Count (TC) : This is active high signal concern with the completion of DMA service. The TC output signal is activated at the end of DMA service, i.e. when present cycle is a last cycle for the current data block.

MARK : This output notifies the selected peripheral that the current DMA cycle is the 128th cycle since the previous MARK output. MARK always occurs at 128 (all multiplies of 128) cycles from the end of the data block.

3. Draw and explain the architecture of the 8257 DMA controller.

Ans: 8257 Block Diagram:

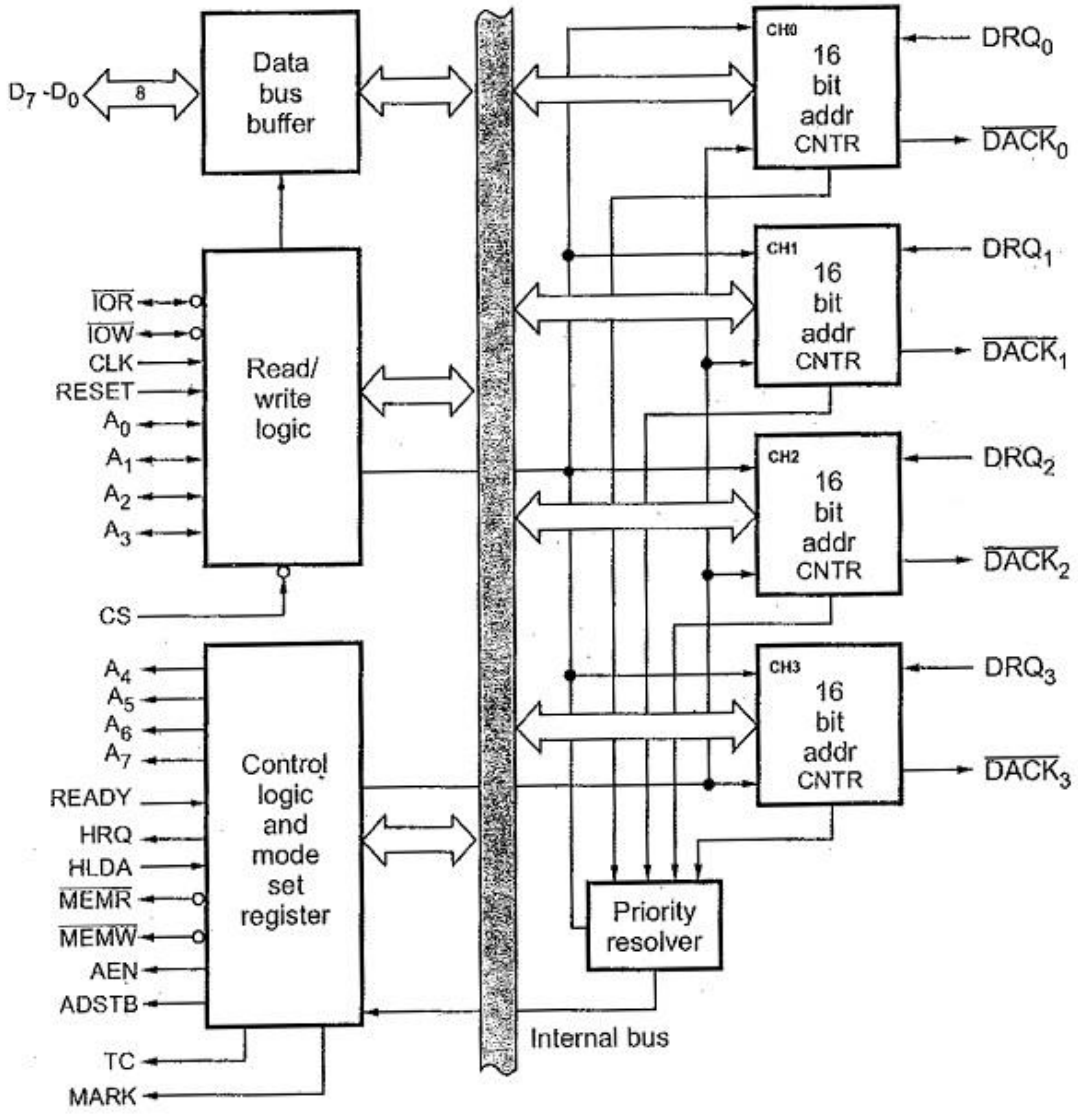

Fig. 14.62 Functional block diagram of 8257

Channels and Devices:

- The 8257 DMA controller supports four channels, allowing up to four peripheral devices to independently request DMA data transfers simultaneously.
- Each channel has a 16-bit address register and a 14-bit counter.
- Channels can transfer data up to 64KB.

DMA Request and Acknowledge:

- Peripheral devices send DMA requests (DRQ) to the DMA controller.
- The controller responds by sending Hold Requests (HRQ) to the CPU, requesting control over the buses.
- Upon receiving the HLDA (Hold Acknowledge) signal from the CPU, the DMA controller takes control of the buses.

Data Transfer Modes:

- Each channel can perform read transfer, write transfer, and verify transfer operations.
- It generates a MARK signal to indicate that 128 bytes have been transferred.

Pin Description:

- DRQ 0 to DRQ 3: Individual channel DMA request inputs.
- DACK 0 to DACK 3: Active-low DMA acknowledge lines for updating peripheral devices.
- D0 to D7: Bidirectional data lines connecting the system bus to the internal data bus of the DMA controller.
- IOR: Active-low input line for reading internal registers in Slave mode.
- IOW: Active-low input line for loading data into registers.

4. Explain various modes of operation of DMA controller 8257.

Ans: Operating Modes of 8257:

The Operating Modes of 8257 can be programmed to operate in following modes :

Rotating Priority Mode :

In rotating priority mode, the priority of the channels has a circular sequence. In this, channel being serviced gets the lowest priority and the channel next to it gets the highest priority as shown in Fig. 14.67.

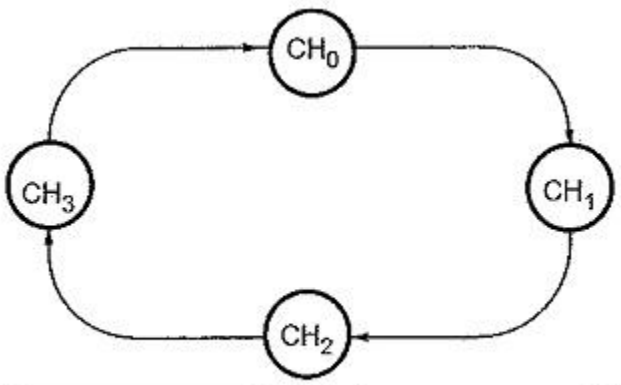

Fig. 14.67 Rotating priority

Thus, with rotating priority in a single chip DMA system, any device requesting service is guaranteed to be recognized after no more than Jhree higher priority services have occurred. This prevents any one channel from monopolizing the system. The rotating priority mode can be set by writing logic '1' in the bit 4 of the mode set register.

Fixed Priority Mode :

In the fixed priority, channel 0 has the highest priority and channel 3 has the lowest priority. Table 14.5 shows the priority ratings.

	Priority	Channel
Highest	1	0
	2	1
	3	2
Lowest	4	3

Table 14.5 Priority ratings

In the fixed priority, after recognition of any one channel for service, the other channels are prevented from interfering with that service until it is completed. If bit 4 of mode set register is logic 0, Operating Modes of 8257 operates in fixed priority mode.

Extended Write Mode :

Microcomputer systems allow use of various types of memory and I/O devices with different access time. If a device can not be accessed within a specific amount of time it returns a "not ready" indication to the 8257 that causes the 8257 to insert one or more wait states in its internal sequencing. The extended write option provides alternative timing for the I/O and memory write signals which allows the devices to return an early READY and prevents the unnecessary occurrence of wait states in the Operating Modes of 8257. It does this by activating MEMW and IOW signals earlier in the DMA cycle, giving more setup time.

TC STOP Mode :

If the TC stop bit is set, a channel is disabled (i.e. its enable bit is reset) after the terminal count (TC) output goes high, thus automatically preventing further DMA operation on that channel. To enable DMA operation on the channel it is necessary to set enable bit of the corresponding channel in the mode set register. If the TC STOP bit is not set, the occurrence of the TC output has no effect on the channel enable bits.

Auto Load Mode :

Auto load Mode when enabled, permits block chaining operations, without immediate software intervention between blocks. In this mode, channel 2 parameters (DMA starting address, terminal count and DMA transfer mode) are initialized as usual for the first data block. These parameters are automatically duplicated in the channel 3 registers when channel 2 is initialized. After the first block of DMA cycles is executed by channel 2 (i.e., after the TC output goes high), the parameters stored in the channel 3 registers are transferred to channel 2 during an 'update' cycle and next block of DMA cycle is executed. This repeat block operations can be used in applications such as CRT refreshing.

During the update cycle, it is necessary to prevent the CPU from inadvertently skipping a data block by overwriting a starting address or terminal count in the channel 3 registers before those parameters are properly auto-loaded into channel 2.

5. Draw and explain the pin diagram of 8255 PPI.

Ans: 8255 Pin Diagram:

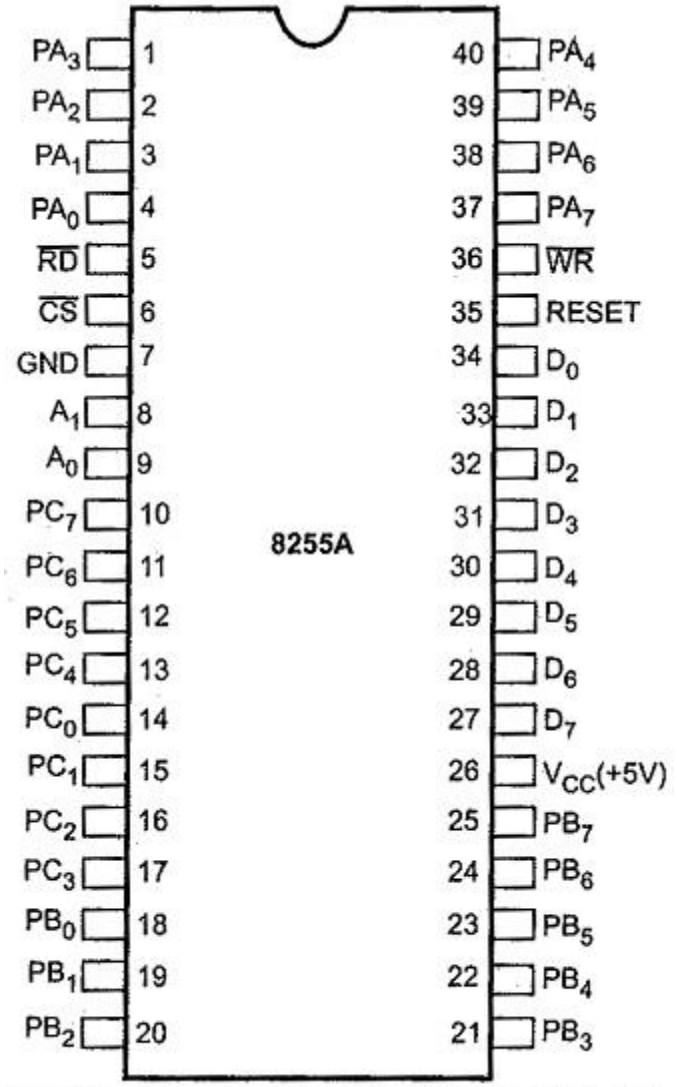

Fig. 14.1 Pin diagram of 8255A

Pin Symbols	Function
D_0-D_7 (Data Bus)	These bi-directional, tri-state data bus lines are connected to the system data bus. They are used to transfer data and control word from microprocessor (8085) to 8255 or to receive data or status word from 8255 to the 8085.
PA_0-PA_7 (Port A)	These 8-bit bi-directional I/O pins are used to send data to output device and to receive data from input device. It functions as an 8-bit data output latch/buffer, when used in output mode and an 8-bit data input buffer, when used in input mode.
PB_0-PB_7 (Port B)	These 8-bit bi-directional I/O pins are used to send data to output device and to receive data from input device. It functions as an 8-bit data, output latch/buffer when used in output mode and an 8-bit data input buffer, when used in input mode.
D_0-D_7 (Data Bus)	These bi-directional, tri-state data bus lines are connected to the system data bus. They are used to transfer data and control word from microprocessor (8085) to 8255 or to receive data or status word from 8255 to the 8085.
PA_0-PA_7 (Port A)	These 8-bit bi-directional I/O pins are used to send data to output device and to receive data from input device. It functions as an 8-bit data output latch/buffer, when used in output mode and an 8-bit data input buffer, when used in input mode.
PB_0-PB_7 (Port B)	These 8-bit bi-directional I/O pins are used to send data to output device and to receive data from input device. It functions as an 8-bit data, output latch/buffer when used in output mode and an 8-bit data input buffer, when used in input mode.

A_1	A_0	$\overline{RD}$	$\overline{WR}$	$\overline{CS}$	Operations
					Input (Read) Operation
0	0	0	1	0	Port A to Data Bus
0	1	0	1	0	Port B to Data Bus
1	0	0	1	0	Port C to Data Bus
					Output (Write) Operation
0	0	1	0	0	Data Bus to Port A
0	1	1	0	0	Data Bus to Port B
1	0	1	0	0	Data Bus to Port C
1	1	1	0	0	Data Bus to Control Register
					Disable Function
X	X	X	X	1	Data Bus Tri-stated
1	1	0	1	0	Illegal Condition
X	X	1	1	0	Data Bus Tri-stated

Table 14.1 Port and register select signals summary

6. Draw and explain the internal architecture of 8255.

Ans: 8255 Block Diagram:

Fig. 14.2 shows the internal 8255 block diagram of 8255 Pin Diagram Microprocessor. It consists of data bus buffer, control logic and Group A and Group B controls.

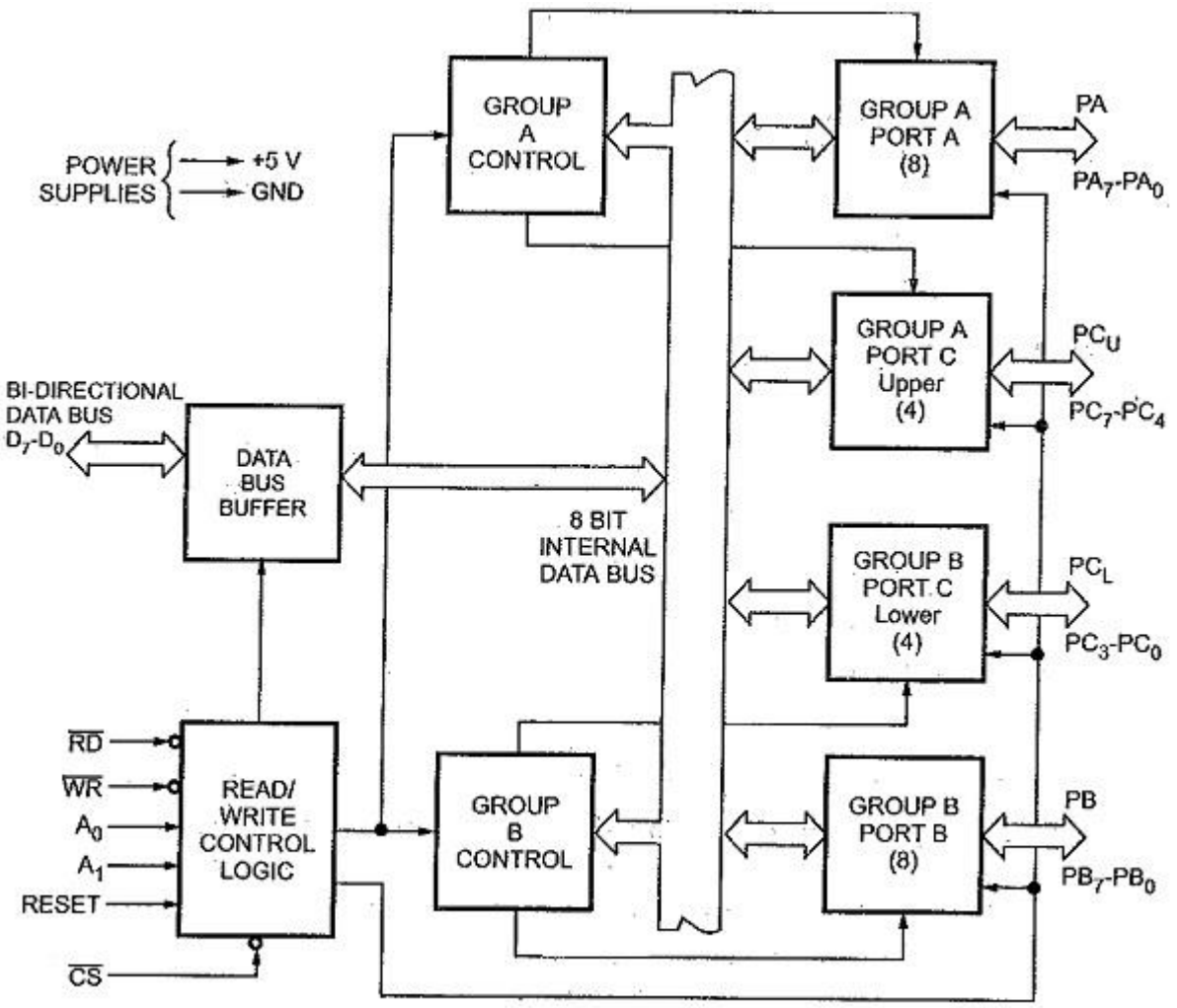

Fig. 14.2 Block diagram of 8255A

Data Bus Buffer:

This tri-state bi-directional buffer is used to interface the internal data bus of 8255 Pin Diagram to the system data bus. Input or Output instructions executed by the CPU either Read data from, or Write data into the buffer. Output data from the CPU to the ports or control register, and input data to the CPU from the ports or status register are all passed through the buffer.

Control Logic:

The control logic block accepts control bus signals as well as inputs from the address bus, and issues commands to the individual group control blocks (Group A control and Group B control). It issues appropriate enabling signals to access the required data/control words or status word. The input pins for the control logic section are described here.

Group A and Group B Controls:

Each of the Group A and Group B control blocks receives control words from the CPU and issues appropriate commands to the ports associated with it. The Group A control block controls Port A and PC_7-PC_4 while the Group B control block controls Port B and PC_3-PC_0.

Port A :

This has an 8-bit latched and buffered output and an 8-bit input latch. It can be programmed in three modes: mode 0, mode 1 and mode 2.

Port B :

This has an 8-bit data I/O latch/ buffer and an 8-bit data input buffer. It can be programmed in mode 0 and mode 1.

Port C :
This has one 8-bit unlatched input buffer and an 8-bit output latch/buffer. Port C can be splitted into two parts and each can be used as control signals for ports A and B in the handshake mode. It can be programmed for bit set/reset operation.

7. Explain Mode 0 and BSR Mode of 8255 in detail.
Ans: Operational modes of 8255
There are two basic operational modes of 8255:

- Bit set/reset mode (BSR mode).
- Input/Output mode (I/O mode).

The two modes are selected on the basis of the value present at the D7 bit of the control word register. When D7 = 1, 8255 operates in I/O mode, and when D7 = 0, it operates in the BSR mode.
Bit set/reset (BSR) mode
The Bit Set/Reset (BSR) mode is applicable to port C only. Each line of port C (PC0 - PC7) can
be set/reset by suitably loading the control word register. BSR mode and I/O mode are independent and selection of BSR mode does not affect the operation of other ports in I/O mode.

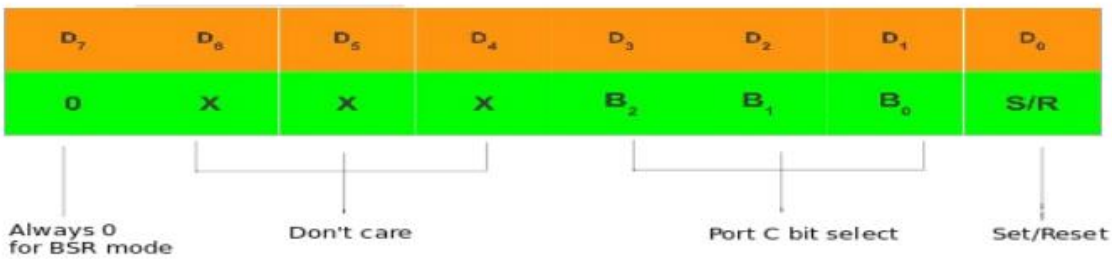

8255 Control Register format for BSR Mode

8255 BSR mode

- D7 bit is always 0 for BSR mode.
- Bits D6, D5 and D4 are don't care bits.
- Bits D3, D2 and D1 are used to select the pin of Port C.
- Bit D0 is used to set/reset the selected pin of Port C.
- Selection of port C pin is determined as follows:

B3	B2	B1	Bit/pin of port C selected
0	0	0	PC_0
0	0	1	PC_1
0	1	0	PC_2
0	1	1	PC_3
1	0	0	PC_4
1	0	1	PC_5
1	1	0	PC_6
1	1	1	PC_7

As an example, if it is needed that PC5 be set, then in the control word,
1. Since it is BSR mode, D7 = '0'.
2. Since D4, D5, D6 are not used, assume them to be '0'.
3. PC5 has to be selected, hence, D3 = '1', D2 = '0', D1 = '1'.
4. PC5 has to be set, hence, D0 = '1'.
Thus, as per the above values, 0B (Hex) will be loaded into the Control Word Register (CWR).

D7	D6	D5	D4	D3	D2	D1	D0
0	0	0	0	1	0	1	1

Input/Output mode
This mode is selected when D7 bit of the Control Word Register is 1. There are three I/O modes.
1. Mode 0 - Simple I/O
2. Mode 1 - Strobed I/O
3. Mode 2 - Strobed Bi-directional I/O
Control Word Format
I/O Control Word Format

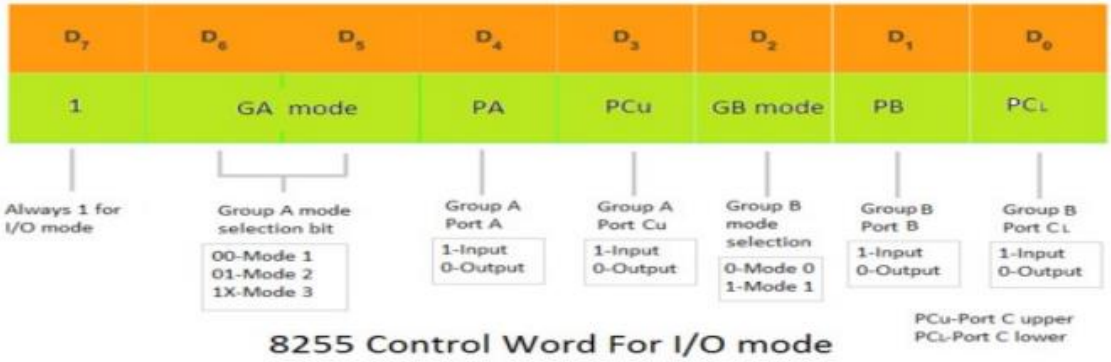

I/O Control Word Format

- D0, D1, D3, D4 are assigned for port C lower, port B, port C upper and port A respectively. When these bits are 1, the corresponding port acts as an input port. For e.g., if D0 = D4 = 1, then lower port C and port A act as input ports. If these bits are 0, then the corresponding port acts as an output port. For e.g., if D1 = D3 = 0, then port B and upper port C act as output ports.
- D2 is used for mode selection of Group B (port B and lower port C). When D2 = 0, mode 0 is selected and when D2 = 1, mode 1 is selected.
- D5 & D6 are used for mode selection of Group A (port A and upper port C). The
- selection is done as follows:

D_6	D_5	Mode
0	0	0
0	1	1
1	X	2

- As it is I/O mode, D7 = 1.

For example, if port B and upper port C have to be initialized as input ports and lower port C and port A as output ports (all in mode 0):
1. Since it is an I/O mode, D7 = 1.
2. Mode selection bits, D2, D5, D6 are all 0 for mode 0 operation.
3. Port B and upper port C should operate as Input ports, hence, D1 = D3 = 1.
4. Port A and lower port C should operate as Output ports, hence, D4 = D0 = 0.

Hence, for the desired operation, the control word register will have to be loaded with "10001010" = 8A (hex).

A) Mode 0 - simple I/O

In this mode, the ports can be used for simple I/O operations without handshaking signals. Port A, port B provide simple I/O operation. The two halves of port C can be either used together as an additional 8-bit port, or they can be used as individual 4-bit ports. Since the two halves of port C are independent, they may be used such that one-half is initialized as an input port while the other half is initialized as an output port.

The input/output features in mode 0 are as follows:
1. Output ports are latched.
2. Input ports are buffered, not latched.
3. Ports do not have handshake or interrupt capability.
4. With 4 ports, 16 different combinations of I/O are possible.

Mode 0 – input mode

- In the input mode, the 8255 gets data from the external peripheral ports and the CPU reads the received data via its data bus.
- The CPU first selects the 8255 chip by making CS low. Then it selects the desired port using A0 and A1 lines.
- The CPU then issues an RD signal to read the data from the external peripheral device via the system data bus.

Mode 0 - output mode

- In the output mode, the CPU sends data to 8255 via system data bus and then the external peripheral ports receive this data via 8255 port.
- CPU first selects the 8255 chip by making CS low. It then selects the desired port using A0 and A1 lines.
- CPU then issues a WR signal to write data to the selected port via the system data bus. This data is then received by the external peripheral device connected to the
- selected port.

8. Draw a block diagram to interface eight switches and eight LEDs to Port A and Port B of 8255.

Ans:

Interfacing switches and LEDs

Problem: Interface an 8255 with 8086 to work as an I/O port. Initialize port A as o/p port , port B as i/p port and port C as o/p port. Port A address should be 0704H. Write a program to sense switch portions SW0 – SW7 as port B.

The sensed pattern is to be displayed on port A, to which 8 LEDs are connected, while the port C lower displays number of on switches out of total 8 switches.

Solution: Given Port A address is 0704H

CWR format

B7	B6	B5	B4	B3	B2	B1	B0	
1	0	0	0	0	0	1	0	→ 82H
I/O mode	Port A Mode 0		Port A o/p	Port C o/p	Port B Mode 0	Port B i/p	Port C o/p	

Prepared by M.V.Bhuvaneswari, Asst.Prof, CSE,MVGRA

8255 ports	I/O Address Lines																Hex port Address
	A15	A14	A13	A12	A11	A10	A9	A8	A7	A6	A5	A4	A3	A2	A1	A0	
Port A	0	0	0	0	0	1	1	1	0	1	0	0	0	0	0	0	**0740H**
Port B	0	0	0	0	0	1	1	1	0	1	0	0	0	0	1	0	**0742H**
Port C	0	0	0	0	0	1	1	1	0	1	0	0	0	1	0	0	**0744H**
CWR	0	0	0	0	0	1	1	1	0	1	0	0	0	1	1	0	**0746H**

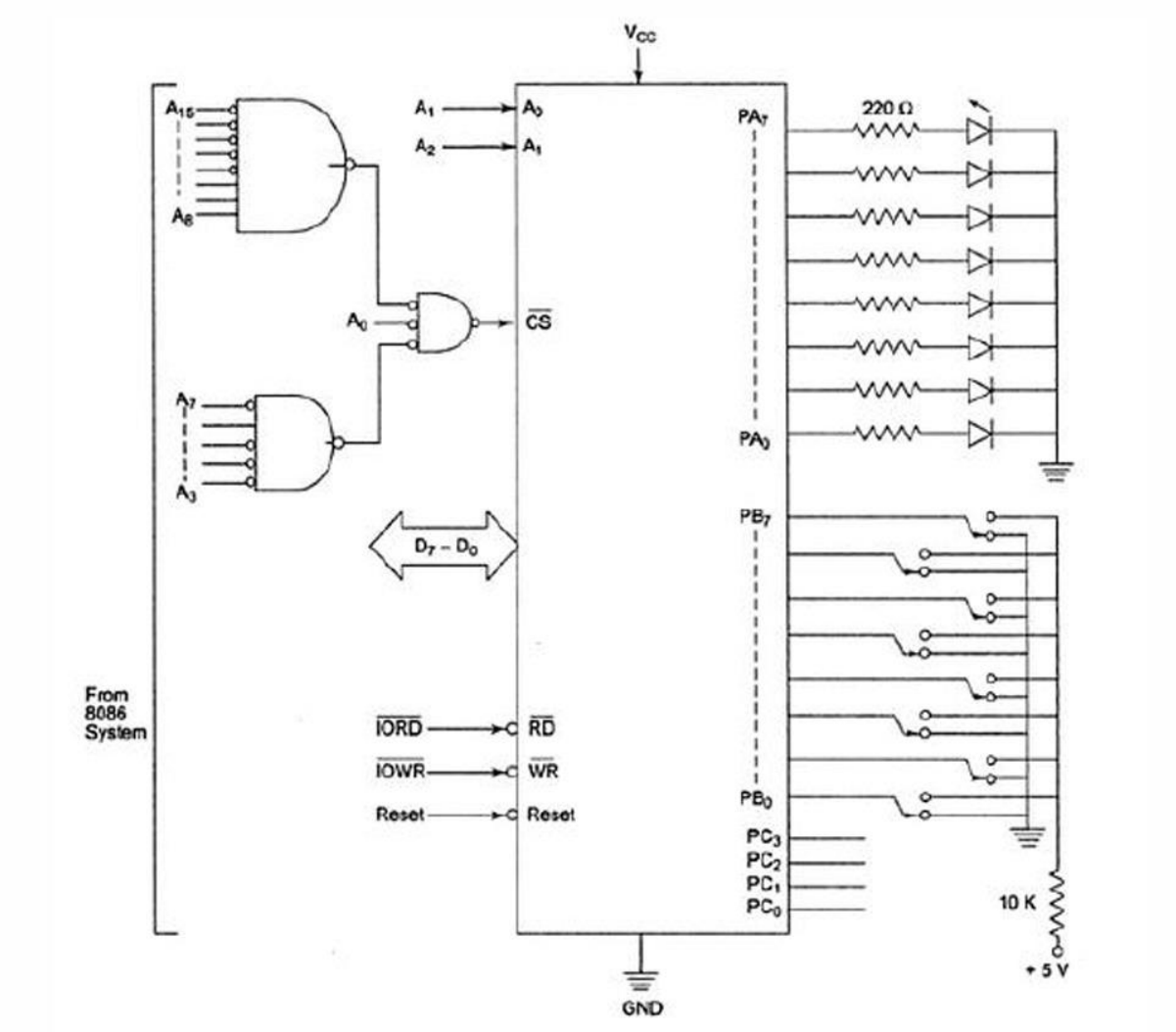

9. Draw and explain the pin diagram of DAC 0808.

Ans: **DAC0808** is a **D/A converter IC** and is used for converting 8-bit digital data input to analog signal output. It is a monolithic IC featuring a full scale output current settling time of 150 ns while dissipating only 33 mW with ±5V supplies. The chip accuracy of conversion is good and power consumption is also low to make it popular. The power supply currents of the DAC0808 are independent of bit codes, and exhibits essentially constant device characteristics over the entire supply voltage range.

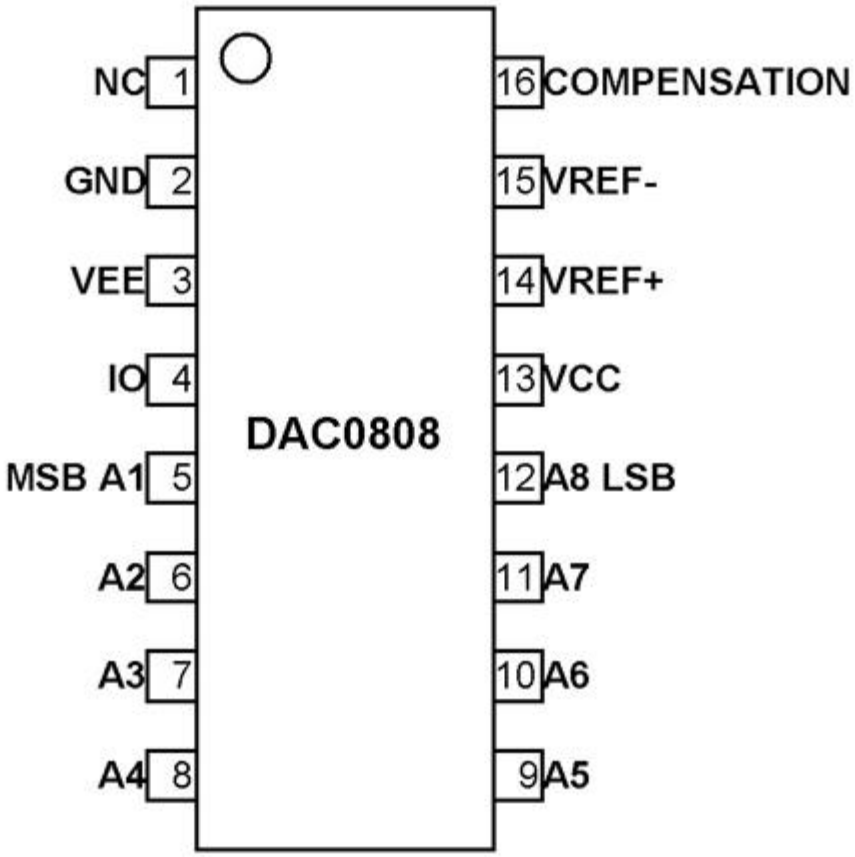

DAC0808 Pinout Configuration

DAC0808 is a sixteen pin device and description for each pin is given below:

Pin	Name	Description
1	NC	No connection
2	GND	Ground
3	VEE	Negative power supply
4	IO	Output signal pin

5	A1	Digital input bit 1 (Most Significant Bit)
6	A2	Digital input bit 2
7	A3	Digital input bit 3
8	A4	Digital input bit 4
9	A5	Digital input bit 5
10	A6	Digital input bit 6
11	A7	Digital input bit 7
12	A8	Digital input bit 8 (Least Significant Bit)
13	VCC	Positive power supply
14	VREF+	Positive reference voltage
15	VREF-	Negative reference voltage
16	COMPENSATION	Compensation capacitor pin

Features and Electrical Characteristics

- 8 bit parallel digital data input
- Fast settling time (typical value): 150 ns
- Relative accuracy at ±0.19% maximum error
- Full scale current match: ±1 LSB
- Non-inverting digital inputs are TTL and CMOS compatible
- High speed multiplying input slew rate: 8 mA/µs
- Power supply voltage range: ±4.5V to ±18V
- Low power consumption: 33 mW@ ±5V
- Maximum Power dissipation: 1000 mW
- Operating temperature range: 0ºC to +75ºC

10. Explain the operation of DAC 0808.

Ans: The **DAC0808** is an **8-bit digital-to-analog converter (DAC)** that performs the essential task of converting digital data into an analog signal. operation and key features:

1. **Input Data**:
   - The DAC0808 accepts an **8-bit digital input**. These 8 bits represent a binary value ranging from 0 to 255 (2^8 - 1).
   - The input data can come from microcontrollers, microprocessors, or other digital sources.
2. **Analog Output**:
   - The output of the DAC0808 is an **analog signal**.
   - Specifically, it produces a **current output** (IOUT) rather than a voltage output. This current output needs to be converted into voltage parameters for practical use in applications.
3. **Pin Configuration**:
   - The DAC0808 has **16 pins**:
     - **IOUT**: The analog output terminal.
     - **A1 to A8**: These are the eight input pins corresponding to the 8-bit digital data.
     - **VREF+** and **VREF-**: These pins set reference voltages for the analog output.
     - Other pins include power supply ground (GND), positive power supply (Vcc), and compensation (COMP) for external capacitor connection.
4. **Features**:
   - **Accuracy**: The DAC0808 provides relative accuracy with a maximum error of ±0.19%.
   - **Power Consumption**: It operates with low power consumption. For a ±5V supply, it utilizes only 33 mW.
   - **Settling Time**: The settling time is fast at 150 ns.
   - **Compatibility**: Inputs are CMOS and TTL compatible.
   - **Temperature Range**: It works within a range of 0°C to +75°C.
   - **Direct Replacement**: It can directly replace MC1508/MC1408 ICs.
5. **Applications**:
   - The DAC0808 is commonly used for **digital-to-analog conversions**.
   - Devices like music players, televisions, mobile phones, CD players, and gaming systems utilize this chip for audio signal conversion.

In summary, the DAC0808 bridges the gap between digital and analog worlds, allowing us to process and manipulate real-world analog signals using digital devices.

11. Explain the diagram of interfacing DAC0808 to 8086 microprocessor with the help of 8255 ports.

12. Draw and explain the interfacing of DAC 0808 to 8086 microprocessor using 8255.

Ans:

- The DAC converts binary numbers into their equivalent analog voltages.
- The DAC finds applications in areas like digitally controlled gain, motor speed controls, programmable gain amplifiers etc.
- The DAC 0800 is a monolithic 8-bit DAC manufactured by National semiconductor.
- It has settling time around 100ns and can operate on a range of power supply voltages, i.e from 4.5V to +18V. Usually the supply V+ is 5V or +12V. The V- pin can be kept at a minimum of -12V.

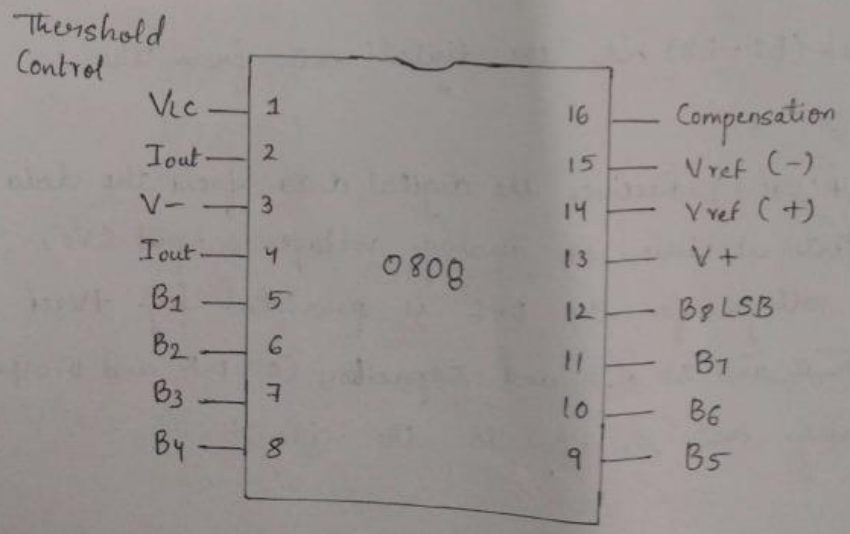

Pin diagram of DAC 0808

13. Draw and explain the pin diagram of ADC 0808.

14. Dra

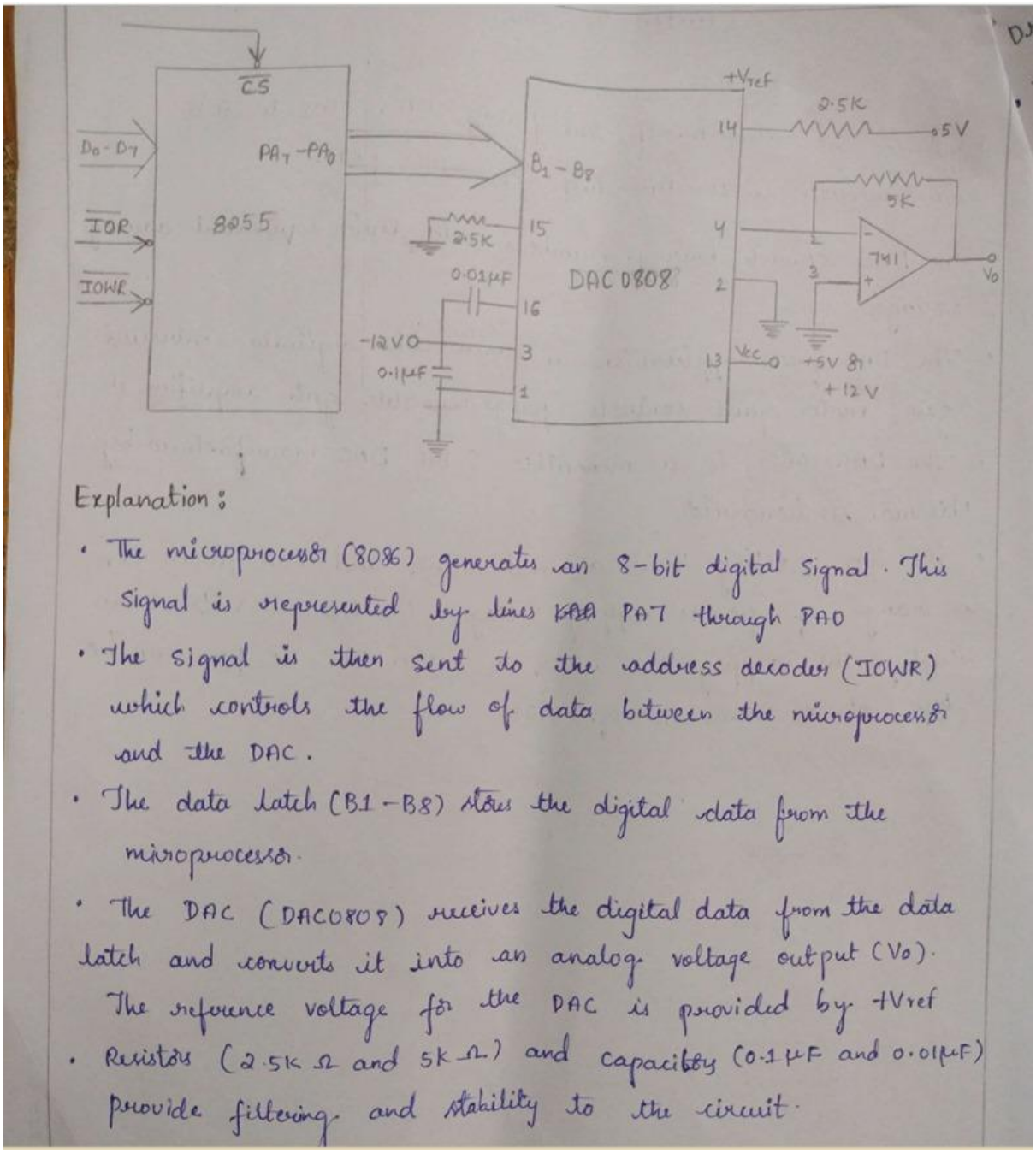

w and explain the timing diagram of ADC0808.

15. Explain the interfacing of ADC 0808 to the microprocessor.

16. Illustrate the typical interfacing circuit for ADC 0808 with a microprocessor system.

4 Marks:

1. List the features of 8257 DMA controller.

Ans:

- It has four channels which can be used over four I/O devices.
- Each channel has 16-bit address and 14-bit counter.

- Each channel can transfer data up to 64kb.
- Each channel can be programmed independently.
- Each channel can perform read transfer, write transfer and verify transfer operations.
- It generates MARK signal to the peripheral device that 128 bytes have been transferred.
- It requires a single phase clock.
- Its frequency ranges from 250Hz to 3MHz.
- It operates in 2 modes, i.e., **Master mode** and **Slave mode**.

2. Differentiate HRQ, HLDA and DRQ, DACK pins of 8257 DMA controller.

1. **Ans: DRQ (DMA Request)**:
    - **Purpose**: Peripheral devices use the DRQ pins to request direct memory access for read-write operations.
    - **Function**: When a device needs to transmit data to memory, it submits a DMA request (DRQ) to the DMA controller.
    - **Priority**: In fixed priority mode, DRQ 0 has the highest priority, and DRQ 3 has the lowest priority among them.
2. **DACK (DMA Acknowledge)**:
    - **Purpose**: These are active-low DMA acknowledge lines that update the requesting peripheral about the status of their request by the CPU.
    - **Function**: DACK lines also act as strobe lines for the requesting devices.
    - **Use Cases**: They inform the peripheral device whether its DMA request has been acknowledged or not.
3. **HRQ (Hold Request)**:
    - **Purpose**: HRQ indicates a request to directly access memory by the peripheral device for read-write operations.
    - **Function**: When a device initiates data transfer between itself and memory, it sends a DMA request (DRQ) to the DMA controller. The DMA controller then sends an HRQ to the CPU, signaling that it needs control over the buses.
    - **CPU Response**: The CPU asserts the HLDA (Hold Acknowledge) signal, allowing the DMA controller to manage data transfer operations.
    - **Tri-State Operation**: During this process, the microprocessor tri-states all the data bus, address bus, and control bus, relinquishing control to the DMA controller.

HLDA (Hold Acknowledge) signal:

1. **Purpose**:
    - The HLDA signal is used in conjunction with the **HRQ (Hold Request)** signal.
    - It allows the **DMA controller** to take control of the system buses (data bus, address bus, and control bus) during a DMA transfer.
2. **Function**:
    - When a peripheral device initiates a DMA transfer (by asserting the DRQ line), the DMA controller sends an HRQ signal to the CPU.
    - The CPU responds by asserting the HLDA signal.
    - While the HLDA signal is active (low), the CPU tri-states the buses, relinquishing control to the DMA controller.
    - During this time, the DMA controller can directly access memory or I/O devices without interference from the CPU.
3. **Tri-State Operation**:
    - Tri-stating the buses means that the CPU effectively disconnects itself from the system buses.

- This allows the DMA controller to drive the buses and perform data transfers.
- Once the DMA transfer is complete, the CPU de-asserts the HLDA signal, regaining control over the buses.

3. Describe briefly the register organization of the 8257 DMA controller.

Ans: The **8257 DMA controller** facilitates **Direct Memory Access** (DMA) operations, allowing devices to transfer data directly to/from memory without CPU intervention. Let's delve into its register organization:

1. **Channel Registers**:
   - Each of the **four independent DMA channels** in the 8257 has a pair of 16-bit registers:
     - **DMA Address Register**: Stores the memory address for data transfer.
     - **Terminal Count Register**: Holds the count of data words to be transferred.
2. **Common Registers**:
   - These registers are shared across all channels:
     - **Mode Set Register**: Configures the DMA mode (e.g., single transfer, block transfer).
     - **Status Register**: Provides information about the DMA operation status.
3. **Specifics**:
   - Each channel can transfer data up to **64KB**.
   - Channels can operate independently and perform read, write, and verify transfers.
   - The 8257 generates a **MARK signal** after transferring 128 bytes to peripheral devices.
   - It requires a **single-phase clock** with a frequency ranging from **250Hz to 3MHz**.
   - The controller operates in two modes: **Master mode** and **Slave mode**.
4. **Pin Description**:
   - **DRQ 0 - DRQ 3**: Individual channel DMA request inputs.
   - **DACK 0 - DACK 3**: Active-low DMA acknowledge lines for peripheral status updates.
   - **D0 - D7**: Bidirectional data lines connecting the system bus to the internal data bus.
   - **IOR**: Active-low input line for reading internal registers in Slave mode.
   - **IOW**: Active-low input line for loading data into registers during memory write cycles.

4. "What do you understand by the following terms?
i) Rotating priority mode
ii) TC STOP mode "
Ans:

i) Rotating Priority Mode :

In rotating priority mode, the priority of the channels has a circular sequence. In this, channel being serviced gets the lowest priority and the channel next to it gets the highest priority as shown in Fig. 14.67.

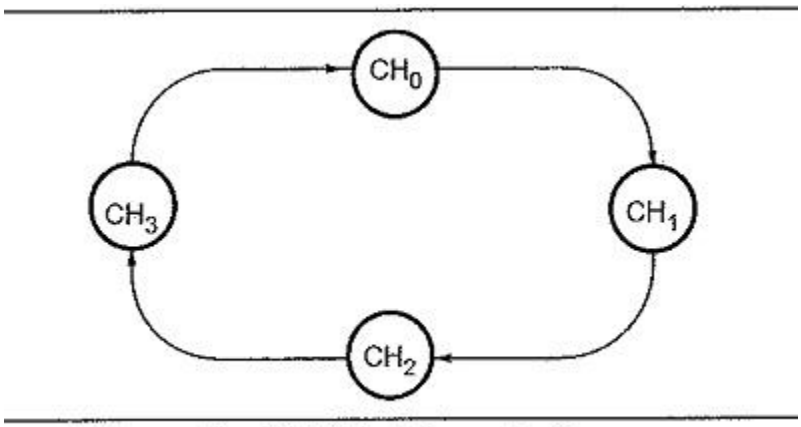

Fig. 14.67 Rotating priority

Thus, with rotating priority in a single chip DMA system, any device requesting service is guaranteed to be recognized after no more than Jhree higher priority services have occurred. This prevents any one channel from monopolizing the system. The rotating priority mode can be set by writing logic '1' in the bit 4 of the mode set register.

ii) TC STOP Mode :

If the TC stop bit is set, a channel is disabled (i.e. its enable bit is reset) after the terminal count (TC) output goes high, thus automatically preventing further DMA operation on that channel. To enable DMA operation on the channel it is necessary to set enable bit of the corresponding channel in the mode set register. If the TC STOP bit is not set, the occurrence of the TC output has no effect on the channel enable bits.

5. List the features of 8255 PPI.

Ans:

Features of 8255 Microprocessor:

- It is a general purpose programmable I/O device used for parallel data transfer.
- It has 24 I/O pins which can be grouped in three 8-bit parallel ports : Port A, Port B and Port C.
- The eight bits of port C can be used as individual bits or be grouped in two 4-bit ports : C_{upper} (C_U) and C_{lower} (C_L).
- The 8255, primarily, can be programmed in two basic modes : Bit Set/Reset (BSR) mode and I/O mode. The BSR mode is used to set or reset the bits in port C.

6. Write about the functionalities of a) Group A and Group B Control units b) Timing and Control logic unit

1. **Ans: Control Group A**:
   - Consists of **Port A** and **Port C (upper)**.
   - Depending on the values of **CS'**, **A1**, and **A0**, different ports can be selected for various modes (input-output function or BSR).
   - Port A can operate in **three modes**: Mode 0, Mode 1, or Mode 2 of input-output.
   - Port C (upper) can work either in **BSR mode** or in **Mode 0** of input-output.
   - Control Group A plays a crucial role in managing data transfer and control words for these ports.
2. **Control Group B**:
   - Comprises **Port C (lower)** and **Port B**.
   - Similar to Control Group A, it selects different ports based on the control signals.

- Port B can operate in either **Mode 0** or **Mode 1** of input-output.
- Port C (lower) can work in **BSR mode** or in **Mode 1** of input-output.
- Control Group B facilitates communication with these ports.

Timing and Control Logic Unit:

The **Timing and Control Logic Unit** within the 8255 PPI performs critical tasks related to data transfer and control. Here's what it does:

- **Data Transfer Management**:
  - Manages both internal and external data transfers.
  - When data needs to be fetched, it accepts the address provided by the processor through the bus.
  - It generates commands to the two control groups (Group A and Group B) for specific operations.
  - Essentially, it coordinates the flow of data between the CPU and external devices.
- **Control Words Handling**:
  - Receives control words from the internal data bus.
  - Issues proper commands to the associated ports (Group A and Group B).
  - These commands determine the mode of operation (input-output, BSR, etc.) for each port.

7. "Find the value of the control word register of 8255 PPI, to operate it in MODE-0 for the following conditions.
i) Port A as the input port and Port B and C as the output port.
ii) Port A as output port and Ports B and C as input ports."

1. **Ans: Port A as Input and Ports B and C as Output**:
   - In **MODE-0**, all three ports (A, B, and C) can work as simple input or output functions.
   - To configure Port A as an input port and Ports B and C as output ports, we need to set the appropriate bits in the control word.
   - The control word for **MODE-0** with Port A as input and Ports B and C as output is **0x80** in hexadecimal or **10000000** in binary [1].
   - Therefore, the value of the control word register for this configuration is **0x80**.
2. **Port A as Output and Ports B and C as Input**:
   - Again, in **MODE-0**, all three ports can work as simple input or output functions.
   - To configure Port A as an output port and Ports B and C as input ports, we use the same control word.
   - So, the value of the control word register remains **0x80** for this configuration as well.

- For both conditions, the control word register value to operate the 8255 PPI in **MODE-0** is **0x80**.

8. Write an Assembly Language Program to read any key from a 4x4 keypad that is interfaced with 8255.

Ans: ; Assume the following:
; Port A (PA) connected to keypad rows (output)
; Port B (PB) connected to keypad columns (input)

```
; Port C (PC) not used in this example

ORG 0x0000 ; Start address

MAIN:
   ; Initialize 8255 control word (mode 0, group A as output, group B as input)
   MVI A, 92H ; Control word: 10010010
   OUT 23H    ; Write control word to 8255 control port

SCAN_KEYPAD:
   ; Scan rows one by one
   XRA A      ; Clear accumulator
   OUT 20H    ; Set all rows to logic 0 (grounded)
   IN 21H     ; Read input from column port (PB)
   MOV C, A   ; Store input in register C

   ; Check which column is low (key pressed)
   CPI 0      ; Compare with 0 (column D0)
   JZ KEY_1   ; If equal, jump to KEY_1
   ; Repeat the above for other columns (D1, D2, D3)

KEY_1:
   ; Handle key 1 (you can repeat this for other keys)
   ; Your code here
```

9. List the features of DAC 0808.

Ans:

- It has a parallel digital input that takes 8-bit data and gives output with relative accuracy at the highest error of ±0.19%.
- The power supply used should be in a range of ±4.5V to ±18V.
- The settling time is 150 ns which is very fast.
- DAC0808 provides features of low power consumption. The maximum power it can dissipate is 1000mW. For a supply voltage of ±5V, it utilizes only 33 mW power.
- The inputs are CMOS and TTL compatible.
- This DAC IC has a high-speed input slew rate of 8 mA/µs.
- It works within a range of 0°C to +75°C temperature.
- It is a direct replacement of MC1508/MC1408 IC's.

10. Describe the operation of Compensation and VEE pins in DAC 0808.

Ans:

VEE: Used for external compensation capacitor connection between VEE and Comp pins.

Compensation:COMP is a compensation pin for DAC where we connect an external capacitor

11. What are the basic requirements to interface DAC 0808 with an 8086 microprocessor?

Ans: Requirements:

1. **DAC0808**: This is the 8-bit DAC chip that converts digital data into analog voltage. The DAC0808 has an R-2R resistor ladder network and can interface directly with microprocessors like the 8086.
2. **8086 Microprocessor**: The heart of your system, the 8086 processes instructions and communicates with external devices.
3. **8255 Programmable Peripheral Interface (PPI)**: The 8255 chip provides I/O ports for interfacing external devices. We'll use it to send data to the DAC0808.
4. **Control Signals**:
   - **Chip Select (CS)**: Activates the DAC0808 for data transfer.
   - **Chip Enable (XFER)**: Controls the transfer of data from the input latch to the DAC latch.
5. **Wiring and Connections**:
   - Connect the **data lines** (D0-D7) of the 8086 to the **data inputs** (DB0-DB7) of the DAC0808.
   - Connect the **address lines** (A0-A15) of the 8086 to the appropriate address decoding circuitry (e.g., 8255).
   - Connect the **control signals** (CS and XFER) from the 8086 to the corresponding pins on the DAC0808.
   - Provide a **reference voltage** (usually ±10V) to the DAC0808.
6. **Programming**:
   - Write assembly code to initialize the 8255 ports (e.g., Port A for data transfer and Port B for control signals).
   - Send the digital data (8 bits) to the DAC0808 via Port A.
   - Activate the XFER signal to update the analog output voltage.
7. **Double-Buffered Operation**:
   - The DAC0808 uses double buffering, meaning data passes through two independently controlled 8-bit latching registers before reaching the R-2R ladder network.
   - This allows simultaneous updating of multiple DACs in a system.

12. Write an assembly language program to generate a triangular wave of frequency 500Hz using DAC0808. 8086 operates at 8 MHz and the triangular wave amplitude should be +5v.

Ans: ; Assume the DAC0808 is connected to port 0x80 (address bus) and port 0x81 (data bus)

```
ORG 1000h  ; Start address

MOV AL, 0C0h  ; Initialize control word for DAC0808 (output A)
OUT 80h, AL   ; Send control word to DAC

MOV CX, 500   ; Set loop count for 500 cycles (500 Hz)

UP:
   ; Increment DAC output value
   IN AL, 81h  ; Read current value
   ADD AL, 1   ; Increment by 1
   OUT 81h, AL ; Write new value to DAC
   LOOP UP     ; Repeat
```

```
DOWN:
   ; Decrement DAC output value
   IN AL, 81h
   SUB AL, 1
   OUT 81h, AL
   LOOP DOWN

JMP UP  ; Repeat the waveform

; End of program
```

13. List the features of ADC 0808.

Ans:The main features of ADC0808 Pin Diagram are :

- 8-bit successive approximation ADC.
- 8-channel multiplexer with address logic.
- Conversion time 100 µs.
- It eliminates the need for external zero and full-scale adjustments.
- Easy to interface to all microprocessors.
- It operates on single 5V power supply.
- Output meet TTL voltage level specifications.

14. What are the control signals of ADC 0808?

Ans: ALE (Address Latch Enable): ALE is used to latch the address lines of the ADC. When ALE transitions from low to high, the address lines are latched, allowing the ADC to recognize the selected channel.

EOC (End of Conversion): EOC indicates the completion of the analog-to-digital conversion process. When the conversion finishes, EOC goes low, signaling that the digital output data is ready for retrieval.

OE (Output Enable): OE controls the output buffer. When OE is high, the output pins (D0-D7) are in a high-impedance state, preventing data corruption during conversion.

SC (Start Conversion): SC initiates the conversion process. When SC transitions from low to high, the ADC begins sampling the analog input and generating the digital output.

15. Explain how to interface ADC0808 with 8255. Use Port A to read the input from ADC, use Port B of 8255 to connect to the address lines of ADC, Use Port C to connect SOC and EOC signals of ADc)

Ans:

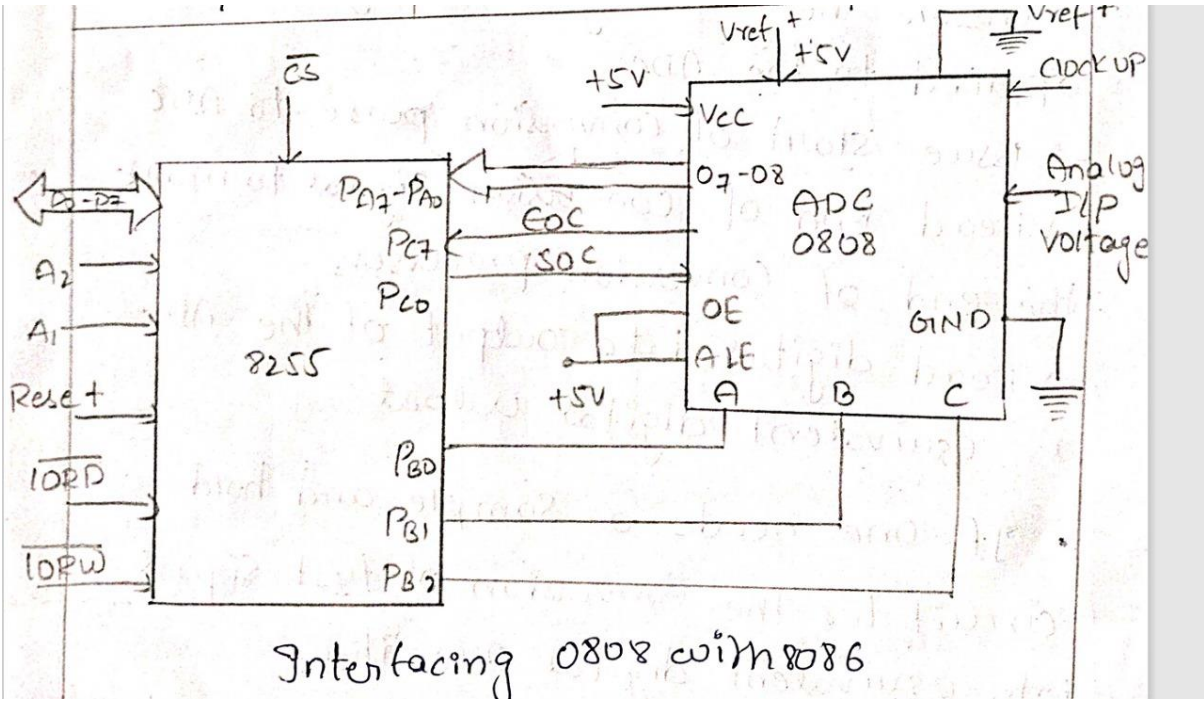

16. What are the steps in the general algorithm for interfacing Analog to Digital Converter(ADc)

Ans:

- Ensure the stability of the analog input applied to the ADC. It's crucial that the input voltage remains constant during the conversion process to obtain accurate results. You can achieve this by using a sample and hold circuit that samples the analog signal and holds it steady for a specific duration.
- Issue a start-of-conversion (SOC) pulse to the ADC. This signal initiates the analog-to-digital conversion process. The ADC begins converting the analog input into its digital equivalent.
- Read the end-of-conversion (EOC) signal from the ADC. The EOC signal indicates that the conversion process is complete. The microprocessor can then proceed to retrieve the digital output from the ADC.
- Read the digital data output of the ADC. This output represents the equivalent digital value corresponding to the original analog input.

2 Marks:

1.What is the high transfer rate in the 8257 DMA controller when the clock input is 2MHz?

Ans: **High transfer rate:** The 8257 DMA controller takes four clock cycles to transfer a byte of data. With a 2 MHz clock input, the theoretical maximum transfer rate would be:

- Transfer rate = Clock rate / Cycles per byte
- Transfer rate = 2 MHz / 4 cycles/byte
- Transfer rate = 0.5 MHz

However, there are additional factors like overhead due to handshake signals and bus arbitration that can slightly reduce the actual achievable transfer rate. In practice, the real-world maximum transfer rate for the 8257 DMA controller with a 2 MHz clock is typically around **500 KB/s (kilobytes per second)**.

2. State the purpose of the MARK pin?

Ans: MARK Pin Purpose:
The MARK pin (or MR/MODE pin) in some peripheral devices serves as a data transfer direction indicator during DMA operations. It can convey:
High: Read operation
Low: Write operation
However, the precise functionality depends on the specific device. Always refer to its datasheet for accurate information.

3. List the priority ratings of fixed priority mode.

Ans: Fixed Priority Mode Priority Ratings:
In fixed priority mode, the 8257 DMA controller prioritizes DMA channels based on pre-defined channel numbers:
Channel 0: Highest priority
Channel 7: Lowest priority
When multiple channels request service simultaneously, the controller grants it to the highest-priority ready channel.

4. Describe DMA verification.

Ans: DMA verification ensures data integrity during transfers:

Memory Parity Checking: Verifies the parity of transferred data to detect bit errors.
Address Parity Checking: Verifies the parity of memory addresses accessed by the DMA controller.
Cyclic Redundancy Check (CRC): Calculates and compares CRC values of transferred data packets to identify corruption.
The employed methods depend on the DMA controller and system configuration.

5. Which operation occurs when A1 =0, A0=0, RD=0, WR=1, CS=0 in 8255?

Ans: The operation that occurs when A1 = 0, A0 = 0, RD = 0, WR = 1, and CS = 0 in the 8255 is a **write operation to the control word register**.

Here's the breakdown of the signals and their meaning:

- **A1 = 0, A0 = 0:** This selects the control word register within the 8255.
- **RD = 0 (inactive):** Since RD is inactive (low), this indicates a write operation (data is being sent to the 8255).
- **WR = 1 (active):** An active WR signal (high) confirms the write operation.
- **CS = 0 (active):** An active CS signal (low) indicates that the 8255 chip itself is selected for communication.

6. Which port is selected by 8255 when the address is 82H and RD signal is activated?

Ans: 8255 Port Selection (Address 82H and RD=1):
When the address is 82H (decimal 130) and the RD signal is active (Read operation), the 8255 selects Port B based on the default decoding scheme. The data from Port B is placed on the data bus for the microprocessor to read.

7. Specify the bit of a control word for the 8255, which differentiates between the I/O and BSR modes?

Ans: The bit that differentiates between I/O and BSR modes in the control word for the 8255 is **bit D7 (the most significant bit)**.

- **D7 = 1:** Selects **I/O mode**. This is the most common mode used to configure Ports A, B, and C for input or output operations.
- **D7 = 0:** Selects **BSR mode (Bit Set/Reset)**. This mode allows individual bits of Port C to be set or reset, but it's not used for data transfer between the microprocessor and peripherals.

8. Find the value of the control word register of 8255 PPI, to operate it in BSR mode when PC5 is selected)

Ans: The value of the control word register for operating the 8255 PPI in BSR mode when PC5 is selected is **10000101**.
Therefore, to write this control word to the 8255, you would need to perform a write operation to the control word register (A1 = 0, A0 = 0, RD = 0, WR = 1, CS = 0) and send the byte 10000101 to the 8255.

9. What is the maximum reference current of DAC 0808?

Ans: The DAC0808's maximum reference current typically ranges from 1 mA to 2 mA. However, the exact value can vary slightly depending on the specific device and manufacturer. It's crucial to consult the datasheet for the particular DAC0808 you're using to get the most accurate information.

10. What is setting time in DAC?

Ans: Setting time refers to the time it takes for the DAC's output voltage to settle to its final value after a digital input change. For the DAC0808, the settling time is typically around 150 nanoseconds (ns). This value is also specified in the datasheet.

11. The output of DAC 0808 is in _____ Analog voltage_____

Ans: The output of the DAC0808 is an analog voltage. It converts the digital input (an 8-bit binary word) into a proportional analog voltage level. The analog voltage ranges from 0 volts (Vss) to a reference voltage (Vref), which you provide externally.

12. How many channels are there in DAC0808?

Ans: The DAC0808 is an 8-bit digital-to-analog converter (DAC). It has **eight channels** for input, each corresponding to one of the eight bits of the digital data. These channels allow you to convert an 8-bit digital value into an analog signal. The DAC0808 is commonly used in applications where precise analog voltage output is required, such as audio systems, instrumentation, and control circuits

13. What are the different types of ADC?

Ans: There are 5 types:

- Successive Approximation (SAR) ADC
- Delta-sigma (ΔΣ) ADC
- Dual Slope ADC

- Pipelined ADC
- Flash ADC

14. While programming the ADC0808 IC what steps are followed?

Ans:

- Select the Analog Channel
- Activate the ALE Signal (Address Latch Enable)
- Start the Conversion
- Monitor the Conversion
- Read the Digital Results
- Make Output Enable (OE) High

15. Which pin is used to select ADC0808?

Ans: The pin used to select the ADC0808 **is not** directly used for selecting the device itself. The ADC0808 utilizes a **Chip Select (CS)** pin to enable communication with the device.

However, selecting a specific analog input channel within the ADC0808 requires a different set of pins. The ADC0808 uses three address lines (**ADD A, ADD B, and ADD C**) to define the desired analog channel. By setting these pins to specific logic levels, you can choose which of the eight channels the ADC will convert.

16. State the role of ALE in ADC?

Ans: The role of ALE (Address Latch Enable) in an ADC like the ADC0808 is to **separate the address and data phases** on a shared bus, enabling more efficient data transfer. Here's a breakdown of its functionality:

1. **Shared Bus:** Many embedded systems use a shared data bus for both addressing and data transfer. This can lead to inefficiencies if both functions happen simultaneously.
2. **Separate Phases:** ALE helps create distinct phases for addressing and data. When active (usually a low-to-high pulse), ALE latches the channel address selected on the address lines (e.g., ADD A, ADD B, ADD C for ADC0808).
3. **Efficient Data Transfer:** After the address is latched, the data bus becomes available for transferring the converted digital value from the ADC. This separation prevents conflicts and allows for faster and more reliable communication.

In simpler terms, ALE acts like a traffic signal to ensure smooth flow on the data bus. It separates the "where" (address) from the "what" (data) during communication with the ADC, leading to improved performance.